S9 ATX

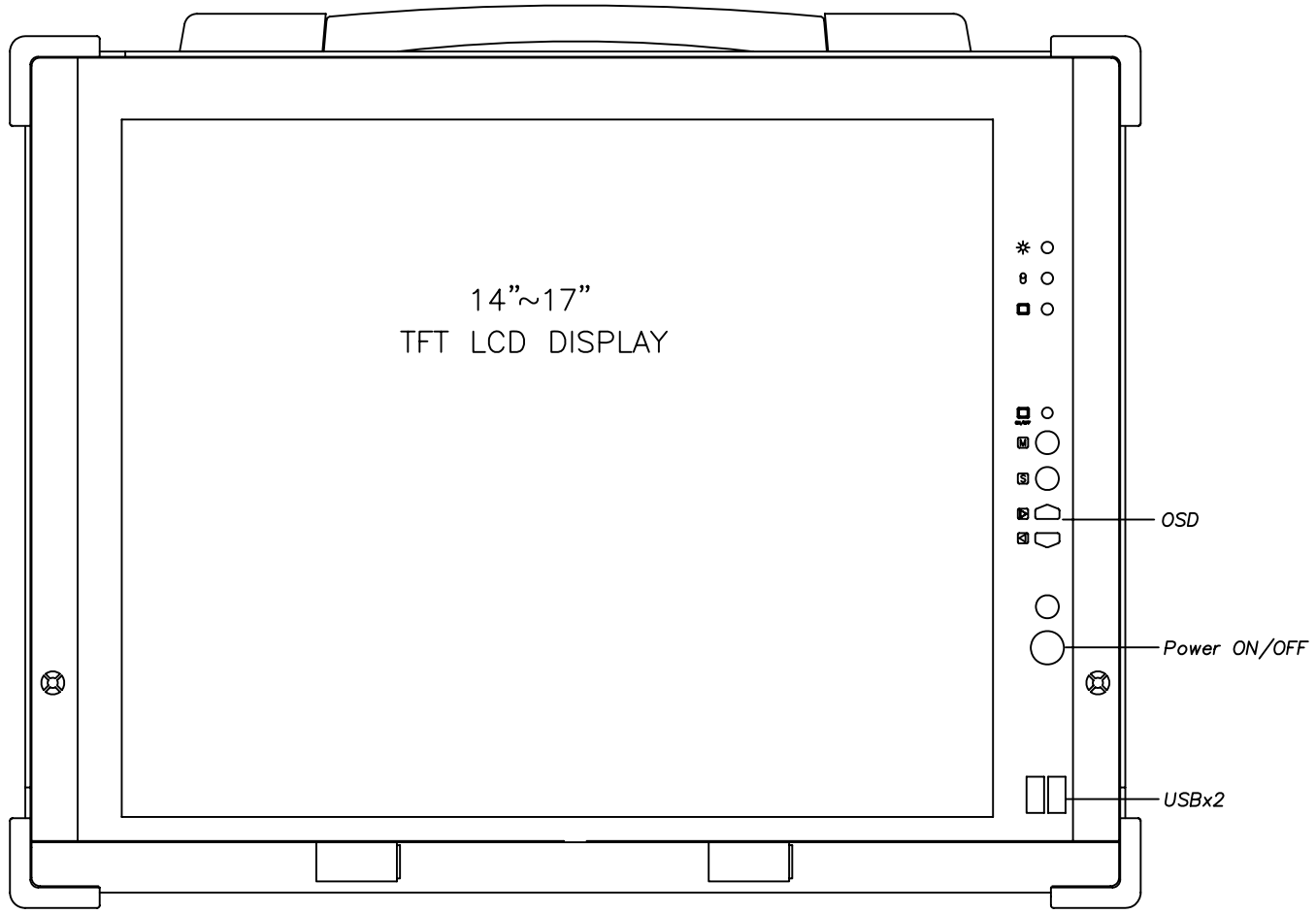
14"~17"
TFT LCD DISPLAY
OSD
Power ON/OFF
USBx2

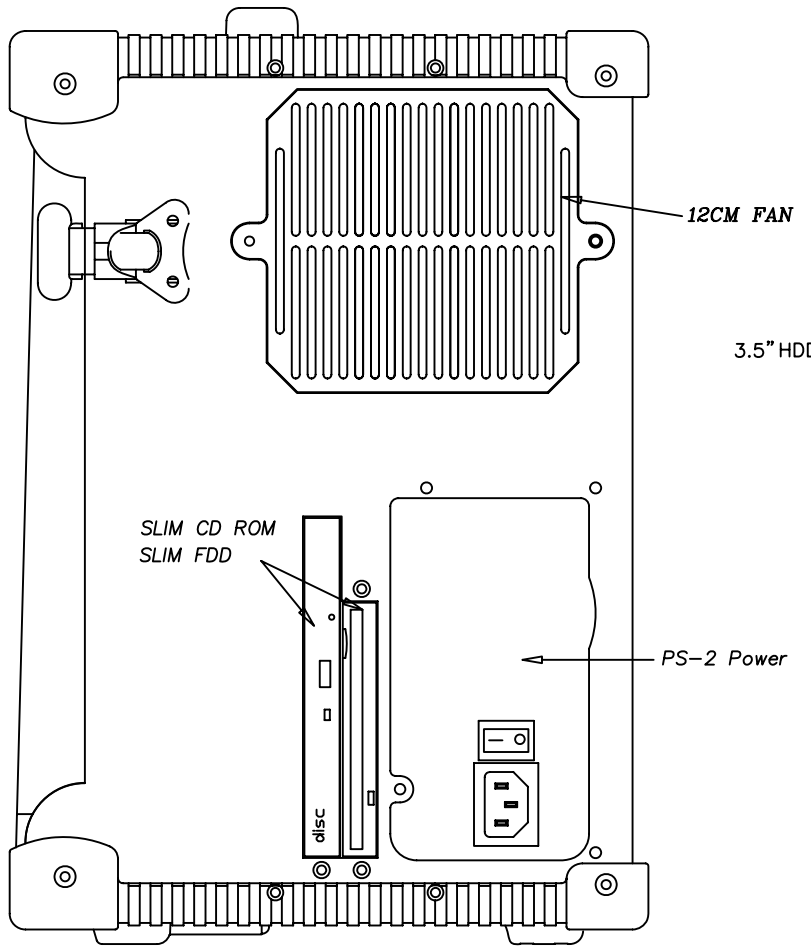
12CM FAN
SLIM CD ROM
SLIM FDD
disc
PS-2 Power

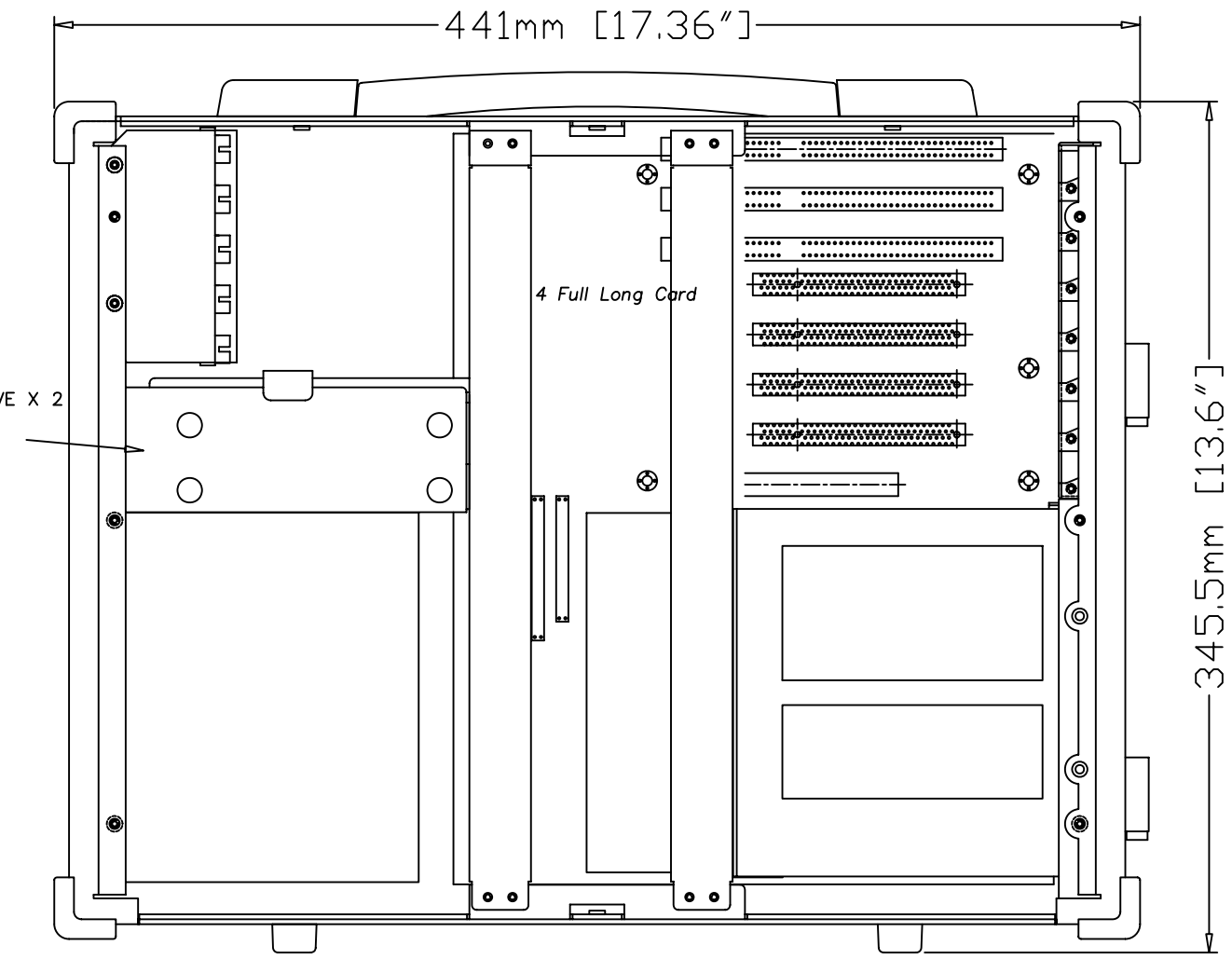
441mm [17.36"]
4 Full Long Card
3.5" HDD DRIVE X 2
345.5mm [13.6"]

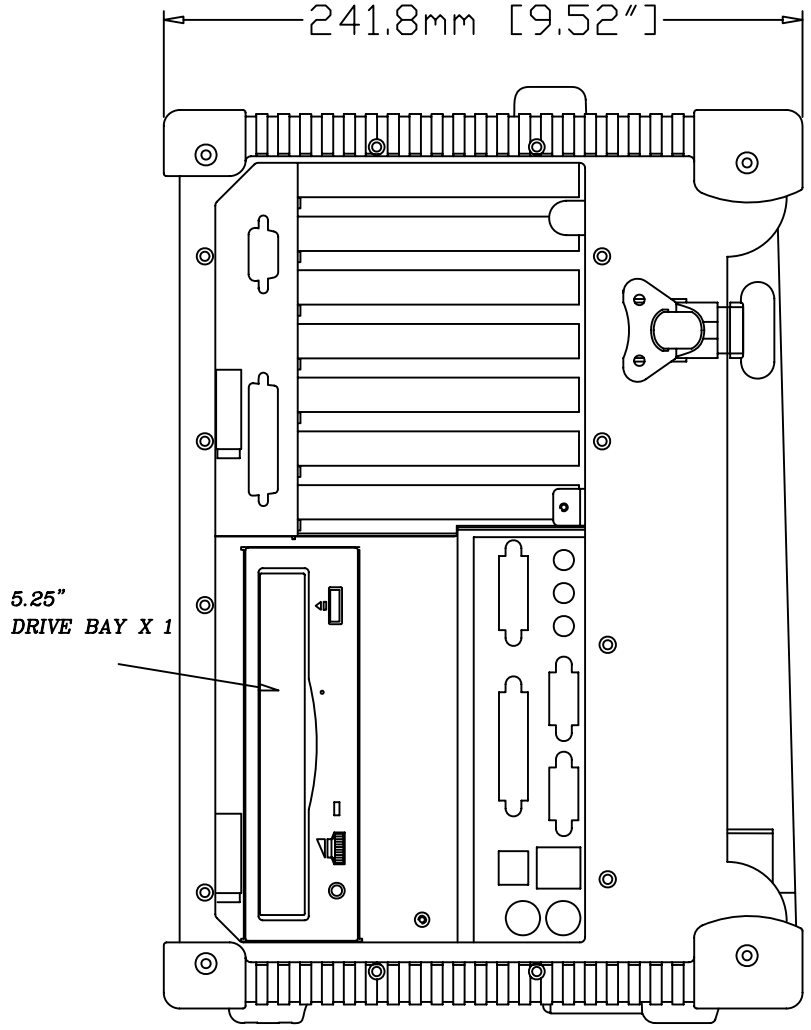
241.8mm [9.52"]
5.25"
DRIVE BAY X 1